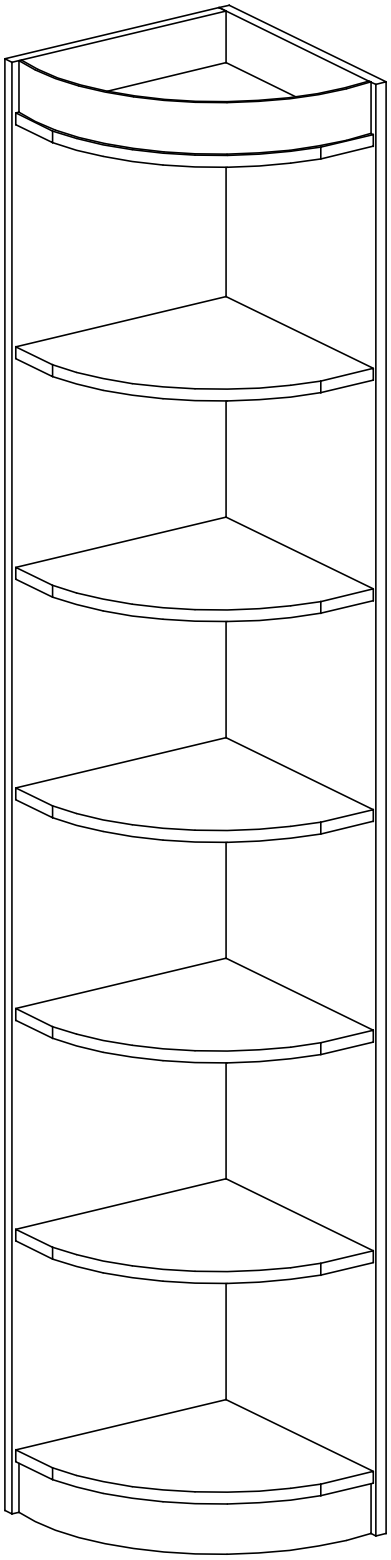

B 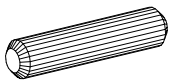 28 x	L 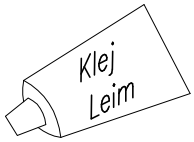 2 x	A 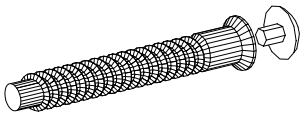 14 x	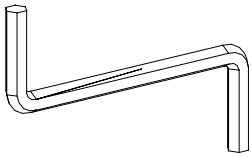

P 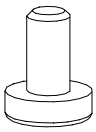 4 x

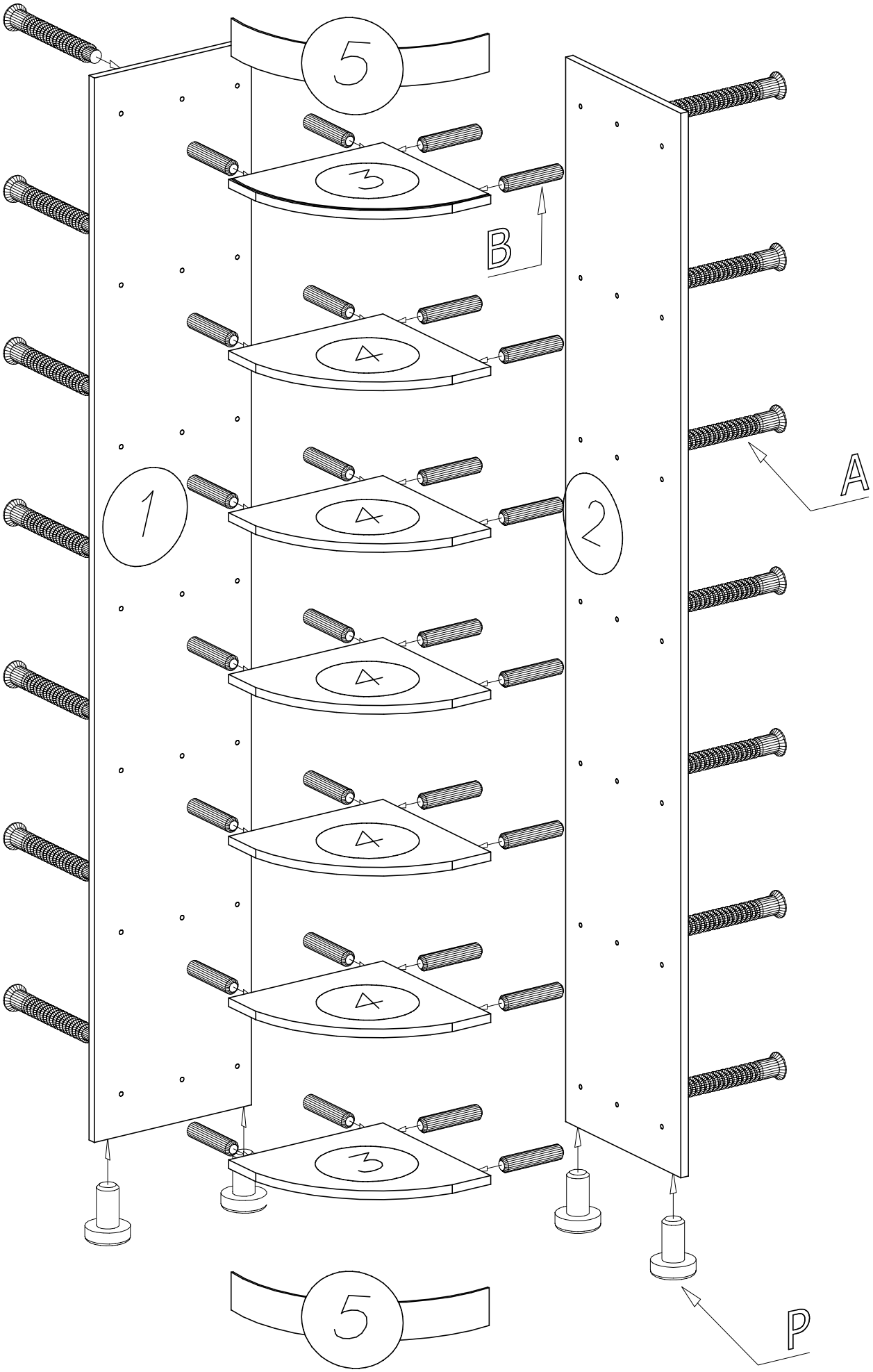
5
3
B
4
4
A
1
2
4
4
4
3
5
P